Heathkit® Manual

for the

PAPER TAPE READER/PUNCH

Model H10

OPERATION 595-2020-02

HEATH COMPANY
BENTON HARBOR, MICHIGAN 49022

Copyright © 1977
Heath Company
All Rights Reserved
Printed in the United States of America

TABLE OF CONTENTS

Introduction 3

Specifications 4

Operation 5

Maintenance 11

Circuit Description 12

Recalibration 14

In Case of Difficulty 21
- Troubleshooting and Repair Precautions 22
- Troubleshooting Chart 23

Semiconductor Identification Charts 26

Parts List 31

Circuit Board
X-Ray Views ..... (Illustration Booklet, Page 4)

Schematic ..... (Fold-in)

Warranty ..... Inside rear cover

Customer Service ..... Inside rear cover

INTRODUCTION

The Heath Model H10 Paper Tape Reader/Punch is an accurate, versatile, and easy-to-use instrument that both reads and punches paper tape. The following features make this instrument very versatile:

— High speed reading (50 characters per second).

— Tapes are easily copied.

— Uses standard 1″ paper tape (roll or fanfold).

— Reader and punch may be operated simultaneously and yet controlled independently.

— Has standard TTL parallel interface.

— Has pushbutton feed switch to generate leader tape.

— Uses photo-electric tape reader for long life and trouble-free operation.

— The reader tape transport is driven by a stepper motor for dependable operation.

The modern, digital design assures excellent accuracy and reliability. The handsome styling complements the Heath Computer Series.

SPECIFICATIONS

Reads and punches standard 8-level, 1 inch (10 inch maximum diameter roll or fan-fold), oiled or unoiled paper tape.

Reading Speed ..... 50 characters per second maximum.

Punching Speed ..... 10 characters per second maximum.

Temperature (Ambient)	10°C to 40°C.
Power Requirements	100-135 volts or 200-270 volts, 50-60Hz, 100 watts maximum.
Overall Dimensions	9-3/4" W × 19-5/8" D × 12-5/8" H. (24.77 cm W × 49.85 cm D × 32 cm H).
Net Weight	22 lbs (10 kgs.)

The Heath Company reserves the right to discontinue products and to change specifications at any time without incurring any obligation to incorporate new features in products previously sold.

OPERATION

Refer to Pictorial 1 (Illustration Booklet, Page 1) for a description of the switch and connector functions.

WARNING: Some types of paper tape contain toxic chemicals. Therefore, be careful you do not use the chad or tape in ways that it can contact a person's mouth or be inhaled.

NOTES:

1. When connected to the H8 or H11 Computer, do not turn the Reader/Punch on or off without resetting or reinitiating the Computer.

2. If the Computer is turned off and the reader is left on, the stepper motor may continue to run.

3. It is normal for the punch solenoids to activate when the Reader/Punch is turned off. Therefore, before you punch a tape after "power up," make and discard six inches of leader to remove any holes punched during turn off.

POWER LINE CONSIDERATIONS

If you change the position of the 120/240 switch, be sure you change fuse F1 to the proper value as follows:

For 120 VAC, use a 1-ampere, 125-volt, slow-blow fuse.

For 240 VAC, use a 1/2-ampere, 250-volt, slow-blow fuse.

Be sure the NOR/LOW switch is set in its proper position to match your line voltage as follows:

NOR range — 115V to 135V rms
or 230V to 270V rms

LOW range — 100V to 120V rms
or 200V to 240V rms

NOTE: If you do not know the value of the line voltage in your area, set the NOR/LOW switch to NOR. Then if you notice that some tape holes are not punched completely, set the switch to LOW.

TAPE READING

Refer to Pictorial 2 for the following steps.

Slide the tape into the tape trough with the sprocket holes positioned as shown.

Lift the tape guide and continue pushing the tape so it goes between the sprocket and the tape guide. Place the tape holes onto the sprocket teeth.

Release the tape guide and push the READ switch. The reader will now read when started by a start pulse at pin 10 of rear panel connector P3.

To manually advance or back up the tape:

- Loop a length of tape out the front opening in the top panel.
- Lift the reader tape guide with one finger and hold the tape away from the sprocket with another finger.

— To advance the tape, first pull the desired amount of tape from the rear of the machine into the loop. Then pull the tape through the exit slot in the front panel until the slack is taken up.

— To back up the tape, first pull the desired amount of tape from the front of the machine into the loop. Then pull the tape out the rear until the slack is taken up.

TAPE PUNCHING

Refer to Pictorial 3 (Illustration Booklet, Page 2) for the following steps.

Loading

Place the chad tray under the punch assembly to catch the chad.

Place the tape (roll or fan-fold) in the tape holder.

Route the tape out of the holder as shown. (Fan-fold over pin A, and roll tape between pins A and B.)

Refer to the inset drawing and (with scissors) shape the end of the tape as shown. Be sure to remove all the tape holding the beginning of the roll.

Route the tape under the tape tensioner and into the tape guide. Continue to push the tape through the die block until it will not go any further.

With the PUNCH switch pushed IN, continue to lightly push on the tape and push the FEED switch. The tape will now feed through the punch.

If you are using fan-fold tape, place the catcher below the tape output port to catch the tape.

To remove tape, cut the tape at the rear of the Reader/Punch and "feed" the tape out. Do not attempt to pull tape from the unit. Also, when the "end of tape" warning is visible, change the tape to prevent anchor tape from being pulled into the die block and jamming it.

INTERCONNECTIONS

Pictorials 4, 5, and 6 show three typical ways of connecting the Reader/Punch to computer systems. Pictorials 4 and 6 show connections for maximum system speed and is most efficient. Pictorial 5 has a slower system speed but is like a conventional teletypewriter.

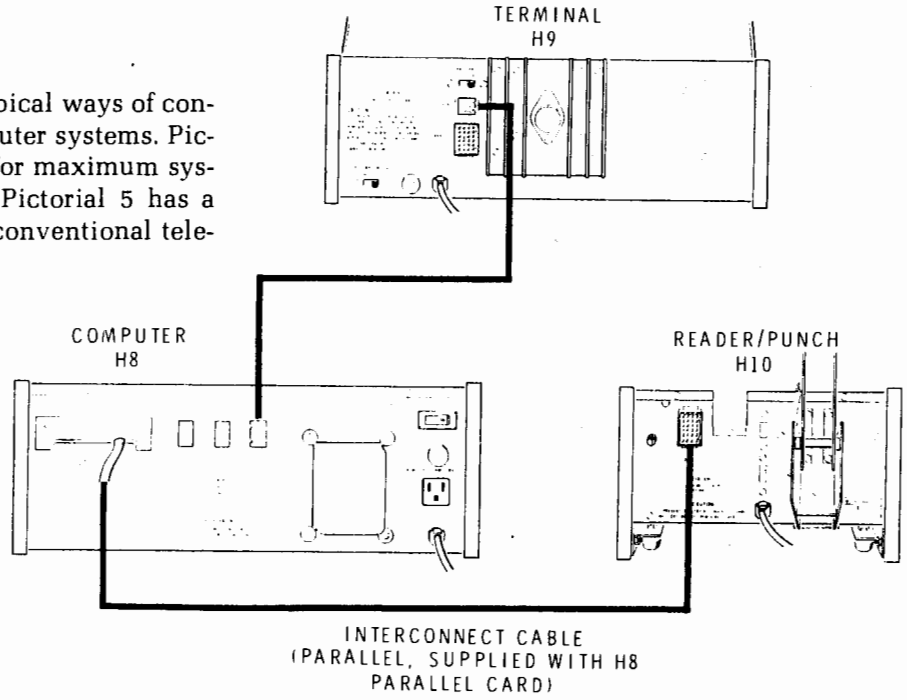

PICTORIAL 4

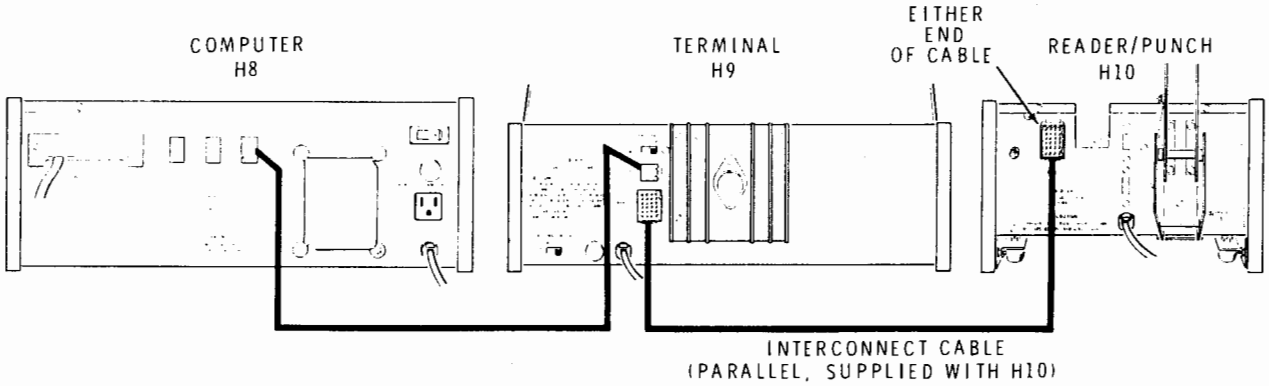

PICTORIAL 5

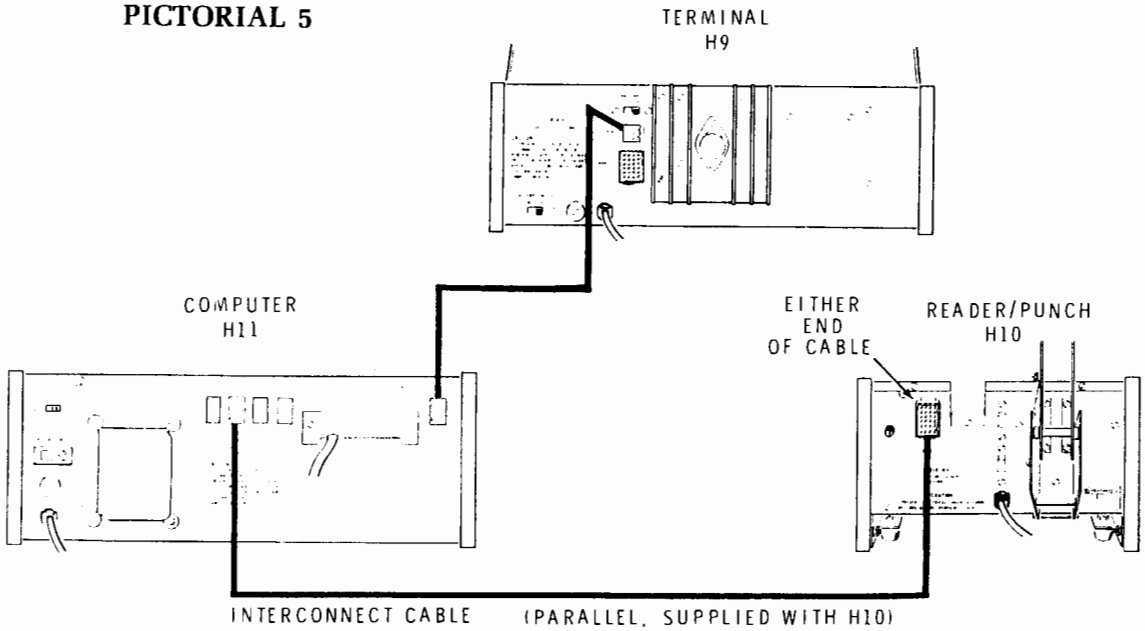

PICTORIAL 6

If you have a computer system other than Heath, refer to the following information and adapt one end of the interconnect cable to fit your system. The following information describes rear panel connector P3 of your Reader/Punch.

Data

Punch Data In ..... 8-bit parallel. A TTL high will produce a hole in the tape. Data must be present coincident with, or earlier than, the leading edge of the punch start signal and remain true for at least 25 mS after the leading edge of the punch start signal.

	MSB							LSB
Bit #	7	6	5	4	3	2	1	0
Pin # on rear panel connector P3	18	17	16	15	14	13	12	11

High Level Input Voltage (V_{IH}) ..... 2 V minimum but < 5.5V.

Low Level Input Voltage (V_{IL}) ..... 0.8V maximum.

Low Level Input Current (I_{IL}) ..... −1.6 mA maximum at 0.4 VIL.

Reader Data Out ..... 8-bit parallel. TTL high is present when there is a hole in the tape being read.

	MSB							LSB
Bit #	7	6	5	4	3	2	1	0
Pin # (P_3)	8	7	6	5	4	3	2	1

High Level Output Voltage (V_{OH}) ..... 2.4V minimum open collector with 1000Ω pullup to +4.4 VDC.

Low Level Output Voltage (V_{OL}) ..... 0.4V maximum at 12 mA Iout low.

Handshake Lines

INPUT

$\overline{\text{Punch Start}}$ ..... A TTL high-to-low transition starts punch cycle of a character. Low must be held for at least 200 nS. With input held low, punch will run at its maximum rate.

Punch Ready ..... TTL high indicates punch is ready. TTL low is present within 200 nS after leading edge of punch start input signal and remains until punch is ready for next character.

$\overline{\text{Punch Ready}}$ ..... TTL low indicates punch is ready. TTL high is present within 200 nS after leading edge of punch start input signal and remains until punch is ready for next character.

OUTPUT

$\overline{\text{Reader Start}}$ ..... A TTL high-to-low transition will advance tape one character. Low must be held for at least 100 nS.

$\overline{\text{Reader Ready}}$ ..... TTL low indicates valid data at data outputs. This output becomes TTL high within 200 nS after leading edge of reader start signal and remains high for approximately 16.5 mS. Reader start input may only be pulsed when this line is low.

LOGIC LEVELS

PUNCH READY, $\overline{\text{PUNCH READY}}$, & $\overline{\text{READER READY}}$ ..... Low is < 0.4 volts, capable of sinking 16 mA. High voltage must not exceed +15 volts. Output is open collector with 1000 Ω pullups to 4.4 volts.

$\overline{\text{PUNCH START}}$ & $\overline{\text{READER START}}$ ..... Low must be < 0.8 volts, capable of sinking 1.6 mA. High must be > 2 volts but ≤ 5.5 volts. Inputs must not be negative with respect to circuit common.

Timing

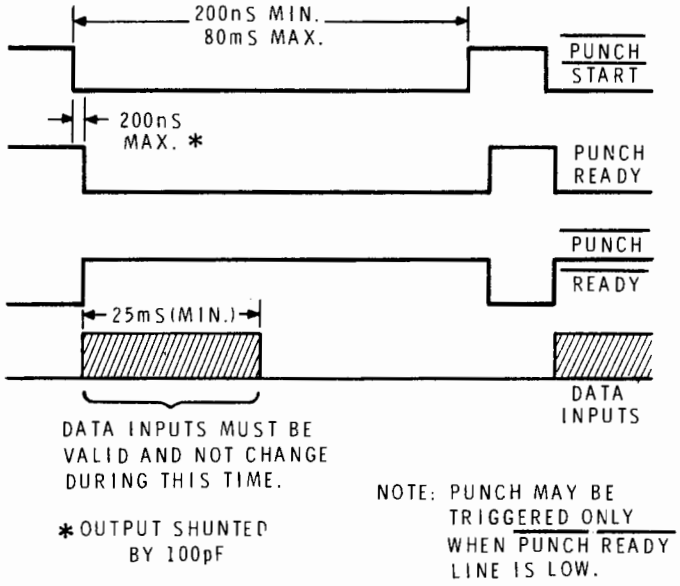

PUNCH

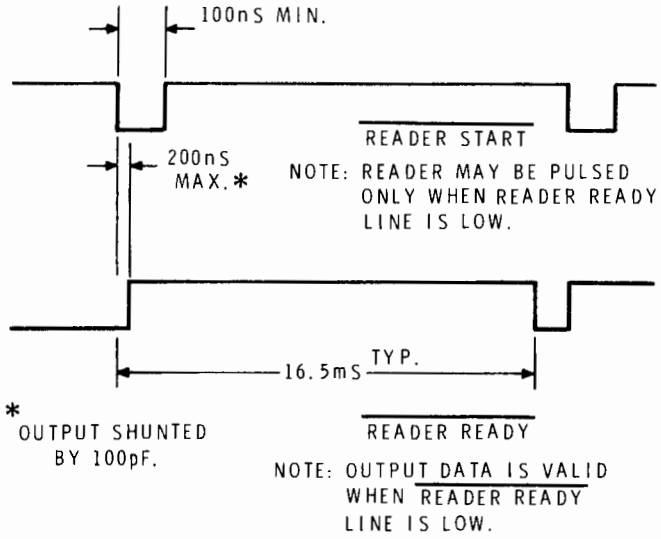

READER

Rear Panel Connections

(See Pictorial 7 (Illustration Booklet, Page 3) for a description of the interconnect cable for use between the H10 and H9 or H11).

Connector Pin		
1	0	DATA OUTPUT LINES
2	1	
3	2	
4	3	
5	4	
6	5	
7	6	
8	7	
9	Reader Ready	
10	Reader Start	
11	0	DATA INPUT LINES
12	1	
13	2	
14	3	
15	4	
16	5	
17	6	
18	7	
19	Punch Ready	
20	Punch Start	
21	Punch Ready	
22	NC	
23	NC	
24	Ground	

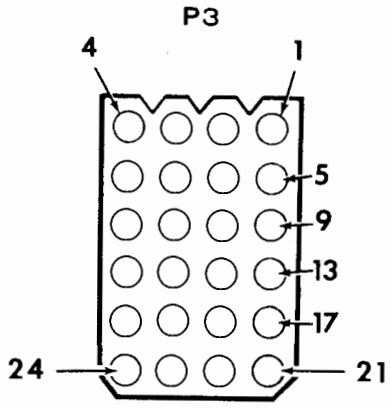

(Viewed from outside of rear panel).

MAINTENANCE

READER

Reader motor M1 is permanently lubricated and should not be oiled.

PUNCH

After you punch 20 rolls of tape:

- Clean the dust from inside the unit.
- Use a good grade of light machine oil and lubricate the moving parts in the area of the die block and paper advance mechanism. Use lubricant sparingly. NO NOT lubricate the solenoid plungers.
- Check to be sure all the solenoids operate freely.
- Check to be sure each solenoid is still adjusted properly. See "Punch Solenoid" on Page 13.

If any part of the punch assembly ever needs to be replaced, replace the entire punch assembly. The die block and punches are only available as a matched set.

CIRCUIT DESCRIPTION

Refer to the Schematic Diagram (on fold-in) as you read the following information.

TAPE READER

Reader Circuits

The eight tape reader circuits all operate in the same manner. Therefore, only one circuit will be discussed.

As a hole in the paper tape is positioned between the lamp and photo-Darlington transistor Q101, the light causes Q101 to turn on for the time that the tape hole is between the lamp and Q101. This causes the output of comparator IC2B to go high, which in turn, causes buffer IC4F to go high. This signal is then applied to the data output connectors and switch SW4.

Resistor R42 and control R1 set the sensitivity of photo-Darlington transistor Q101. Resistors R43 and R44 set the reference trigger level of comparator IC2B, and R47 is an output pull-up resistor. Resistors R45, R46, and R47 provide positive feedback for IC2B to eliminate false triggering.

Motor Timing

Timing for the stepper motor drive circuitry is generated by one-shot multivibrator IC14. When Read switch SW7 is pushed to ON, pin 12 of IC13D goes low. This causes pin 11 to go high and trigger IC14 if the $\overline{\text{Reader Start}}$ line is low. Pin 6 is then driven low and this low is applied to IC15, pin 12 of the motor drive circuitry and pin 9 of $\overline{\text{Reader Ready}}$ gate IC13C. At this time, IC13C pin 8 goes high and drives IC7D and IC18D and C, which indicates that the reader is busy. After IC14 times out, $\overline{Q}$ goes high again and waits for another 1-to-0 transition from the $\overline{\text{Reader Start}}$ line (IC14, pin 1). When Read switch SW7 is ON, a 1-to-0 on IC14 pin 1 will advance the tape one character. IC17B and IC18A and B produce a fixed delay for the $\overline{\text{Reader Start}}$ signal.

MOTOR DRIVE

IC15 divides the timing signal (at pin 12) by two and produces two output signals (at pins 8 and 6) that are 180 degrees out of phase with each other. (See Pictorial 8, Illustration Booklet, Page 3.) The remaining circuitry produces a 4-phase signal and drives the stepper motor.

When power is applied, assume that IC15 $\overline{Q}$, IC16BQ, and IC16A $\overline{Q}$ are high. Then, because the D inputs of IC16 are tied to IC16A $\overline{Q}$, IC16A Q is driven high and the timing sequence in Pictorial 8 begins.

With the first pulse to IC15 T, IC15 Q goes high and $\overline{Q}$ goes low. Because of the high on the D inputs of IC16, IC16B Q goes high, and $\overline{Q}$ goes low. IC16A remains unaffected by the transition. The next time, IC15 changes state, IC16B remains unaffected, and IC16A changes. As the input pulses continue, a 4-phase signal is produced that is applied through buffers A, B, C, and D of IC4 to drive stepper motor transistors Q23, Q24, Q25, and Q26. Diodes D21 through D24 suppress the inductive kickback from the motor windings.

TAPE PUNCH

Because the tape punch circuits are so similar, only channel 1 will be described.

Tape punch signals (from either the tape reader circuit or the data input connector) are coupled through switch SW4 to AND gate IC6A. When the signal at pin 2 is high and the timing signal (explained later) at pin 1 is high, pin 3 goes high and turns on Darlington transistor pair Q17 and Q18. This allows current to flow through solenoid L1 and a hole is punched. Diodes D10 and D19 suppress the inductive kick of L1. Diode D10 also causes L1 to release energy quicker than normal by waiting until the inductive kickback reaches approximately 20 volts above the supply before it zeners and begins the suppression.

POWER SUPPLIES

+25V, +12V, +9V Supplies

AC voltage from the secondary winding of transformer T1 is rectified by diodes D2 and D7, and filtered by capacitor C3 to produce +25 volts DC. The +12 and +9-volt supplies operate in a similar manner.

+5V and +4.4V Supplies

IC17 is a voltage regulator which changes +9 volts to +5 volts. Capacitors C7 and C8 provide noise suppression. Diode D25 keeps externally connected equipment from supplying power to the +5-volt supply and turning on some of the output buffers when the Reader/Punch is off.

Lamp Supply

The constant zener voltage of diode D1 is applied to the base of transistor Q1 and, therefore holds its emitter constant . . . as it follows the base voltage. This in turn holds the base and emitter of transistor Q2 constant, and the lamp receives a constant voltage independent of variations in the +9-volt supply.

PUNCH TIMING

Three one-shot multivibrators control the punch timing. IC9 controls the duration of the punching operation, IC12 provides the time for the punches to return to their normal positions, and IC11 times the paper-advance solenoid. The multivibrators are interconnected so they will perform their timimg functions in the proper sequence.

Gate IC10B is for circuit protection. Without it, when the unit is turned on, the Q output of IC8A could be high and possibly turn on all the solenoids continuously. This could blow the fuse or damage the solenoids.

When the FEED switch is pushed, the pulse is debounced by IC17A and IC19, and the output of gate IC10C goes low and starts the timing of IC9; its Q output goes high. This operates solenoid L9 (through IC7F, and Q19 and Q20) and transfers the low at the D input of IC8A to the Q output. With a low and a high at the inputs of IC10B, solenoids L1 through L8 remain off.

When the Q output of IC9 goes high, the $\overline{Q}$ output goes low. After IC9 times out, the $\overline{Q}$ output goes high again and starts IC12 and drives its $\overline{Q}$ low. This does not affect IC11 at this time, but it does clear IC8A and turns off the punch drivers.

When IC12 times out, its $\overline{Q}$ output goes high and starts IC11, driving its Q output high. This drives IC7A and transistors Q21 and Q22 to drive tape advance solenoid L10. When IC11 times out, its $\overline{Q}$ output goes high and forces a high at the Q output of IC8B, which had been cleared when IC9 started timing out. This is transferred to the Punch Ready output by IC7E. This high at pin 13 of IC10D now allows the PUNCH and FEED switches or a "punch start" signal at P3-19 to control the punching.

In normal operation, a transition from high to low on the "punch start" line (P3-19) will be coupled through IC10C to trigger IC9.

RECALIBRATION

If you ever replace a part (electrical or mechanical) or any adjustment is needed, perform the necessary following steps to make your unit operate properly.

Remove the top cover. (Replace it when you are done.)

ELECTRICAL (Tape Reader)

Refer to Pictorial 9 (Illustration Booklet, Page 3) for the following steps.

Push the indicated wire end of the LED test assembly into the TP +5V connector on the main circuit board.

Push the connector on the other end of the assembly onto pin 1 of connector P3. (See inset drawing #1.)

NOTE: In the next step, adjust control R1.

1. Adjust the control counterclockwise until the LED just lights. Then mark the position of the control. (See inset drawing #2.) NOTE: If the LED does not light, this is all right. Turn the control fully counterclockwise and mark its position.

2. Place a length of the most transparent blank tape that you will be using in your system into the reader trough so it is between the lamp and the reader assembly.

3. Turn the control clockwise until the LED goes out or the control is fully clockwise. Mark the position of the control.

4. Center the control between the two marked positions. Then remove the tape from the reader.

Refer to the following chart and, one at a time, push the test assembly connector onto the indicated seven pins of connector P3. Repeat the above four steps for each pin connection and adjust the proper control.

DATA LINE	CONNECTOR P3, PIN	ADJUST CONTROL
1	2	R2
2	3	R3
3	4	R4
4	5	R5
5	6	R6
6	7	R7
7	8	R8

MECHANICAL

Punch Solenoid

Refer to Pictorial 10 for the following steps.

Use a .078" allen wrench and loosen the solenoid mounting screws. Slide the solenoid in its mounting slots and find the resting position of its punch actuating plate.

Manually depress the solenoid plunger and slide the solenoid in its mounting slots until you obtain the 1/4" dimension for the actuator position. Then retighten the solenoid mounting screws.

Recheck the 1/4" measurement and check for free actions of the solenoid and actuator.

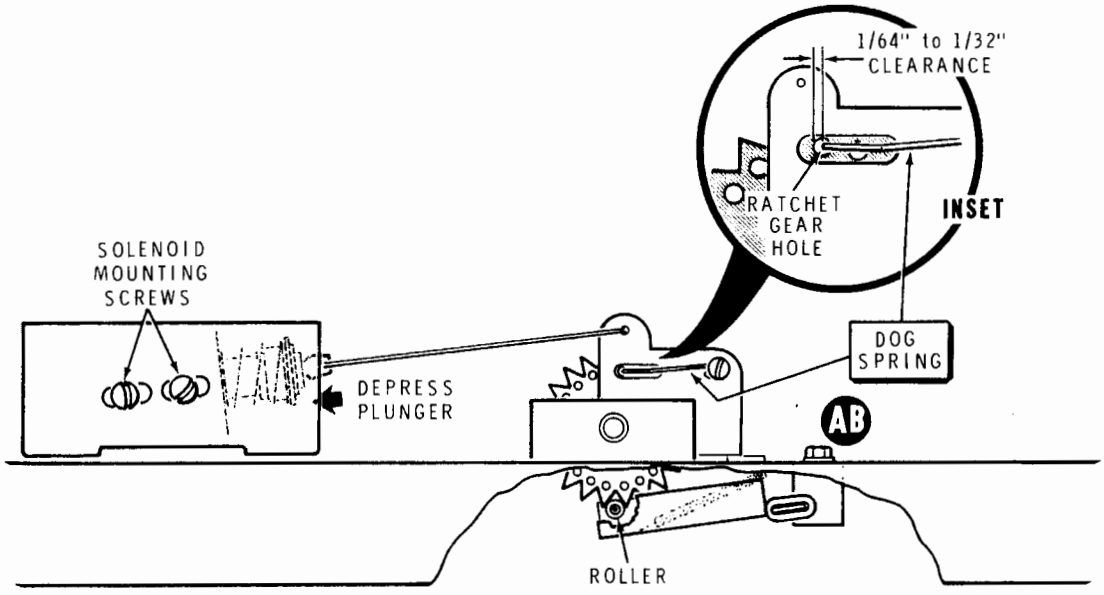

PICTORIAL 11

Paper Advance Mechanism

Refer to Pictorial 11 for the following steps.

Loosen detent bracket screw AB and adjust the bracket for the 1/64" to 1/32" clearance shown in the inset drawing. Then securely retighten the bracket screw. Firmly hold the bracket in place as you tighten the screw to prevent it from turning and "off centering" the detent roller on the detent. Be sure the dog spring is centered vertically in the ratchet gear hole.

Manually depress the solenoid plunger. Then loosen the mounting screws and slide the solenoid in its mounting slots until you obtain the 1/64" to 1/32" dimension for the dog spring and detent. Then retighten the solenoid mounting screws.

Manually operate the solenoid several times. The plunger should freely return to its resting position. If it does not, loosen the ratchet gear setscrews, move the gear away from the dog plate slightly, and then retighten the setscrews.

Recheck the dimensions and check for free actions of the parts.

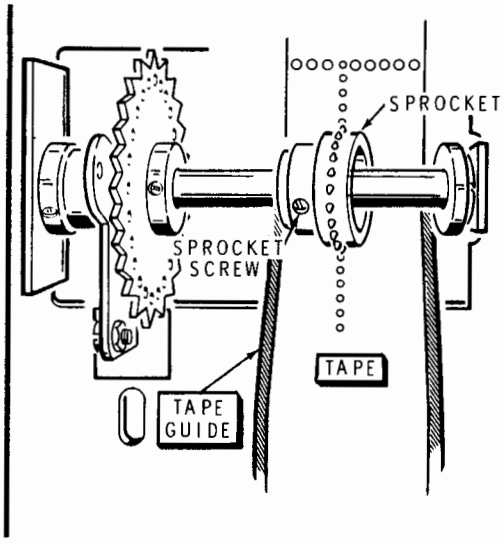

PICTORIAL 12

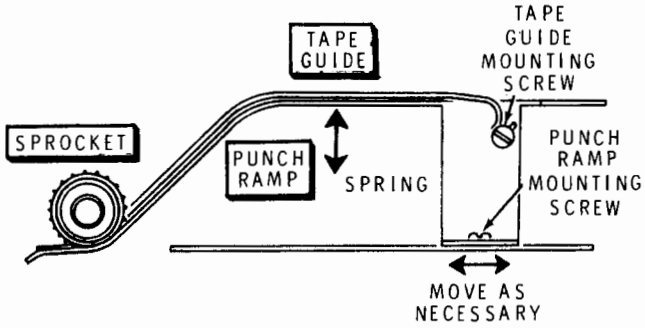

PICTORIAL 13

Punch Sprocket

Refer to Pictorial 12 for the following steps.

Loosen the sprocket screw.

Slide the sprocket to align its teeth with the small row of holes punched in the paper tape. Be sure the sprocket teeth do not hit the tape guide.

If the sprocket is misaligned, one side of the sprocket holes in the tape will be folded down or the tape may not drive at all.

Retighten the sprocket screw.

Generate 12" of punched tape and tear it off.

Punch Ramp and Tape Guide

Refer to Pictorial 13 for the following steps.

Loosen the punch ramp mounting screws and adjust the ramp in its slots so that the ramp touches the sprocket with light pressure as shown and the sprocket teeth are centered in the slot. NOTE: It may be necessary to slightly spring the ramp. Also, excessive pressure may cause the tape to tear or the tape drive to operate incorrectly.

Retighten the punch ramp mounting screws.

Loosen the tape guide mounting screw and adjust the guide so it will direct the paper tape up the ramp and out the port, but so that it does not touch the ramp where the tape travels.

Retighten the tape guide mounting screw.

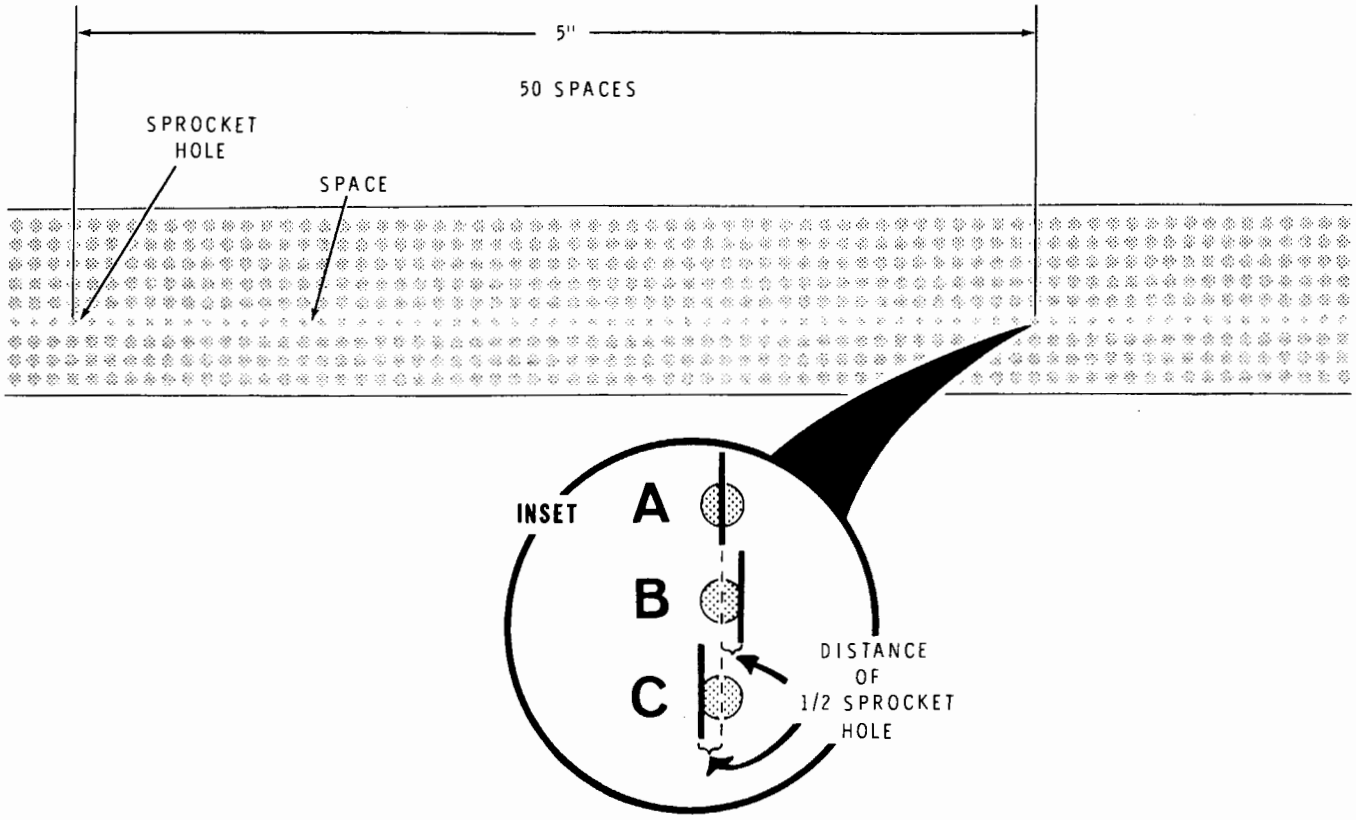

PICTORIAL 14

Tape Spacing

Refer to Pictorial 14, use a steel rule, and measure 5" from the center of one of the sprocket holes as shown. 50 spaces must be within this 5 inches and the center of the last hole must not be off more than .025". Part A of the inset drawing shows the ideal measurement, and Parts B and C show measurements with acceptable error — .025" or approximately 1/2 a sprocket hole. If the error in the measurement is **not** acceptable, refer to Pictorial 12 and:

- Be sure the punch ramp is properly adjusted.
- Loosen the punch sprocket screw.
- Turn the sprocket a few thousandths of an inch (1/4 the width of a drive tooth or less).
- Retighten the sprocket screw.
- Generate and measure another length of punched tape. If the measurement is now closer to being correct, make the next adjustment in the same direction. However, if the measurement is further from being correct, make the next adjustment in the opposite direction and make smaller adjustments.

NOTE: The above is a trial-and-error adjustment and may need to be performed several times to get the accuracy required.

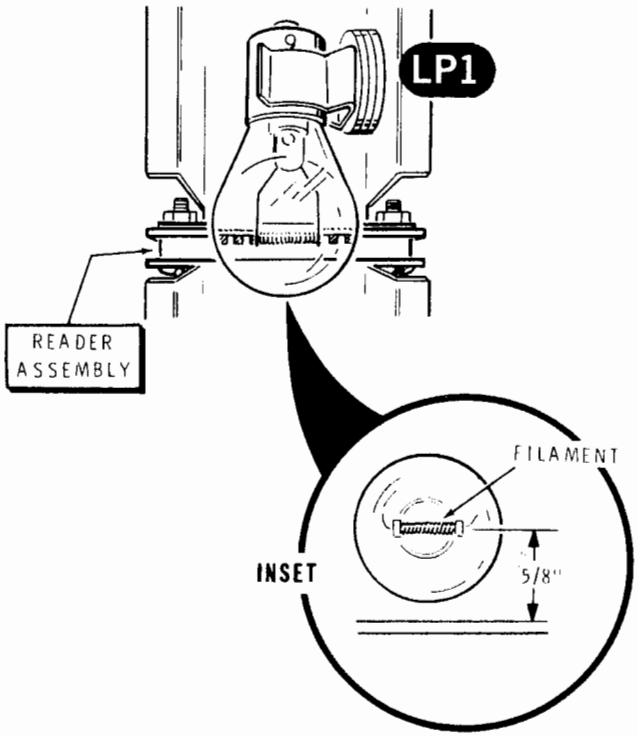

PICTORIAL 16

Reader Lamp

Refer to Pictorial 15 for the following steps.

Rotate the lamp so its filament is horizontal and 5/8" above the reader assembly as shown in the inset drawing. Make small adjustments by moving the lamp in the lamp clip. Make larger adjustments by loosening the lamp clip, moving the clip, and then retightening it.

Position the lamp filament directly over the holes in the reader assembly.

Reader Tape

Refer to Pictorial 16 for the following steps.

Insert a properly punched tape into the reader trough until the leading edge of the tape is between the reader assembly and the drive sprocket.

Line up the tape holes with the holes in the reader assembly. Then adjust screw DA until the tape is parallel to the reader trough and still aligned over the reader assembly holes.

Turn on the Reader/Punch.

Slightly loosen the drive sprocket screw.

NOTE: Be sure power is on for the next step.

( ) Refer to Pictorial 14 and adjust the drive sprocket as follows:

1. Use an accurate rule and measure the sprocket hole spacing over 5 inches of the tape. (Measure from the center of one of the sprocket holes.) Notice if the measurement most resembles A, B, or C in the inset drawing.

2. Pull the tape over the drive sprocket and align the tape holes with the holes in the reader assembly by rotating the drive sprocket on the motor shaft. Be sure the drive sprocket teeth are positioned in the drive holes of the tape. If the tape measurement resembled:

   - Measurement A, center the tape holes over the holes of the reader assembly.
   - Measurement B, align the rear edges of the tape holes (edge nearest rear of machine) with the rear edges of the tape holes in the reader assembly.
   - Measurement C, align the front edges of the tape holes with the front edges of the reader assembly holes.

3. Carefully tighten the drive sprocket screw and recheck the adjustment. If necessary, make a notch in the tape as shown in the inset drawing on Pictorial 16 to make this step easier.

Turn off the Reader/Punch.

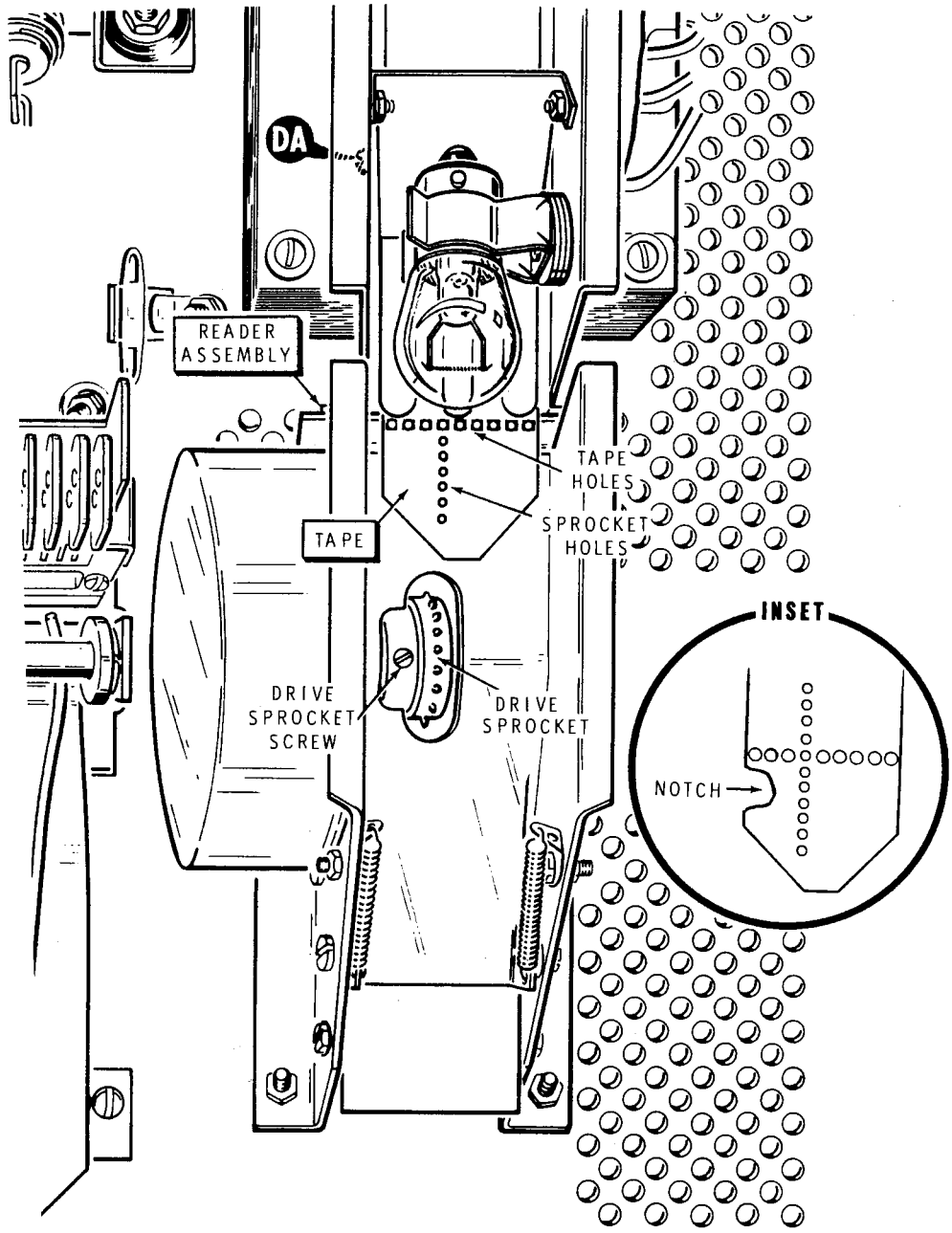

PICTORIAL 16

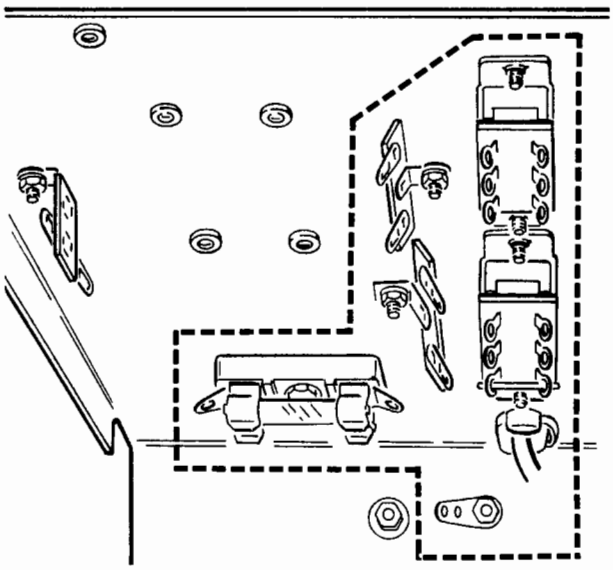

WARNING: BOXED-IN AREAS SHOW HAZARDOUS VOLTAGE LOCATIONS.

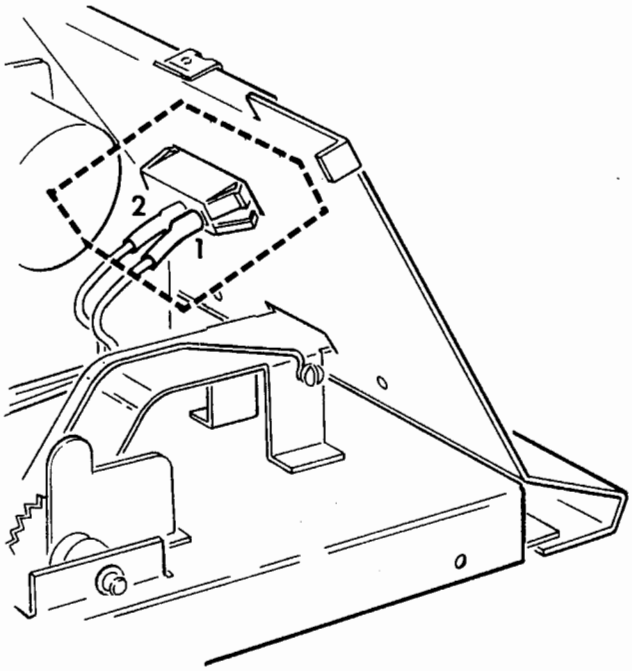

PICTORIAL 17

IN CASE OF DIFFICULTY

WARNING: When the line cord is connected to an AC outlet, hazardous voltages are present at several places inside your Tape Reader/Punch. See Pictorial 17.

This section of the Manual is divided into two parts. The first part, titled "Troubleshooting and Repair Precautions," points out the care that you should use when you service the unit to prevent damaging components.

The second part, titled "Troubleshooting Chart" gives difficulties and likely causes.

If the "Troubleshooting Chart" does not help you locate the problem, read the "Circuit Description" and refer to the Schematic Diagram (fold-in) to help you determine where the trouble is.

Refer to the "Circuit Board X-Ray Views" (Illustration Booklet Page 4) for the physical location of parts on the circuit boards.

NOTE: In an extreme case where you are unable to resolve a difficulty, refer to the "Customer Service" information inside the rear cover of the Manual. Your warranty is also located inside the rear cover.

TROUBLESHOOTING AND REPAIR PRECAUTIONS

Be sure you disconnect the line cord before you remove the cabinet from your Tape Reader/Punch.

1. Make sure you do not short any adjacent terminals or foils when you make tests or voltage measurements. If a probe or test lead slips, for example, and shorts together two adjacent connections, it is very likely to damage one or more of the transistors, diodes, or IC's.

2. Be especially careful when you test any circuit that contains an IC or a transistor. Although these components have an almost unlimited life when used properly, they are much more vulnerable to damage from excess voltage and current than many other parts.

3. Do not remove any components while the unit is turned on.

4. Use a voltmeter with a high input impedance when you measure voltages.

5. Never apply +5 volts or ground potentials to the output of any IC.

6. When you make repairs, make sure you eliminate the cause as well as the effect of the trouble. If, for example, you find a damaged resistor, be sure you find out what damaged the resistor. If the cause is not eliminated, the replacement resistor may also become damaged when you put the unit back into operation.

7. In several areas of the circuit boards, the foil patterns are quite narrow. When you unsolder a part to check or replace it, avoid excessive heat while you remove the part. A suction-type desoldering tool makes part removal easier.

COMPONENTS

To remove faulty resistors or capacitors; first clip them from their leads, then heat the solder on the foil and allow each lead to fall out of its hole. Preshape the leads of the replacement part and insert them into the holes in the circuit board. Solder the leads to the foil and cut off the excess lead lengths.

You can remove transistors in the same manner as resistors and capacitors. Make sure you install the replacement transistor with its leads in the proper holes. Then solder the leads quickly to avoid heat damage. Cut off the excess lead lengths.

FOIL REPAIR

To repair a break in a circuit board foil, bridge solder across the break. Bridge large gaps in the foil with bare wire. Lay the wire across the gap and solder each end to the foil. Carefully trim off any excess bare wire.

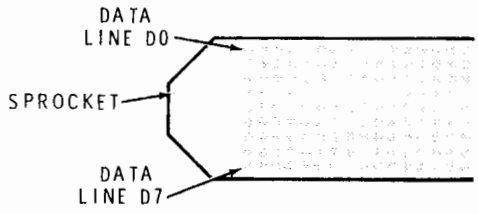

TROUBLESHOOTING CHART

PUNCH

PROBLEM	POSSIBLE CAUSE
Solenoid does not activate or is continuously activated. Solenoid: Sprocket, L9 #0 data, L1 #1 data, L2 #2 data, L3 #3 data, L4 #4 data, L5 #5 data, L6 #6 data, L7 #7 data, L8 Paperdrive, L10	1. IC7F, Q19, Q20, L9* 1. IC6A, Q17, Q18, L1* 1. IC6B, Q15, Q16, L2* 1. IC6C, Q13, Q14, L3* 1. IC5B, Q11, Q12, L4* 1. IC5A, Q9, Q10, L5* 1. IC6D, Q7, Q8, L6* 1. IC5C, Q5, Q6, L7* 1. IC5D, Q3, Q4, L8* 1. IC11, IC7A, Q21, Q22, L10* * NOTE: Failure of one of diodes D9 through D20, or D26, can cause other semiconductors associated with that circuit to fail.
All punch solenoids are continuously activated; paper drive solenoid is not operating.	1. IC9.
All punch solenoids (except sprocket hole solenoid L9) are continuously activated. Paper drive solenoid operates normally.	1. IC10B.
All punch solenoids (except sprocket hole solenoid L9) fail to energize. Paper drive solenoid operates normally.	1. IC8A.
All Punches Inoperative.	1. +25-volt supply. 2. IC8B, IC9, IC10C, IC10D, IC13B.
Punches and motor M1 inoperative.	1. +12-volt supply.
All solenoids energized, reader inoperative, reader lamp lights, but fuse blows in a short time.	1. IC17. 2. +5-volt supply.
Punch solenoids energize for only one character after power is applied.	1. IC11. 2. IC12.
Sprocket teeth tear punched tape.	1. Binding in solenoid linkage. 2. IC12. 3. Tape not properly threaded. 4. Drive sprocket incorrectly aligned. 5. Tape tensioner binding.
Chad not completely removed from tape.	1. IC9. 2. Punch solenoids incorrectly adjusted. 3. Unsuitable tape. 4. Worn die block assembly. 5. Low line voltage. Check NOR/LOW switch SW2.
Tape does not advance or is erratic. Tape advance solenoid L10 actuates normally.	1. Detent or solenoid incorrectly adjusted. 2. One or more punches not returning to their released positions.
Tape advance solenoid L10 does not operate. Punches operate normally.	1. L10. 2. IC7A, Q21, Q22, IC11. 3. Binding in ratchet mechanism.

READER

PROBLEM	POSSIBLE CAUSE
Lamp does not light. Tape advances normally.	1. Lamp burned out. 2. Q1, Q2.
Data line does not change state at a tape hole: #0 line	1. Q101, R1, IC2B, IC4F. 2. Dirt in light passage to Q101.
#1 line	1. Q102, R2, IC2A, IC4E. 2. Dirt in light passage to Q102.
#2 line	1. Q103, R3, IC2D, IC3E. 2. Dirt in light passage to Q103.
#3 line	1. Q104, R4, IC2C, IC3D. 2. Dirt in light passage to Q104.
#4 line	1. Q105, R5, IC1B, IC3A. 2. Dirt in light passage to Q104.
#5 line	1. Q106, R6, IC1A, IC3F. 2. Dirt in light passage to Q106.
#6 line	1. Q107, R7, IC1D, IC3B. 2. Dirt in light passage to Q107.
#7 line	1. Q108, R8, IC1C, IC3C. 2. Dirt in light passage to Q108.
Motor M1 inoperative or erratic in both READ and COPY modes. Punch operates normally.	1. IC15, IC16, IC4. 2. Q23, Q24, Q25, Q26. 3. M1.
Motor M1 runs backwards.	1. Red and black leads of one winding are interchanged.
Motor M1 inoperative in READ mode, operates normally in COPY mode.	1. IC13D, IC14.
All outputs remain low with no tape in reader. Adjustments R1 through R8 have no effect.	1. R43. 2. Improper lamp position.

READER (Continued)

PROBLEM	POSSIBLE CAUSE
All outputs remain high with blank tape in reader. Adjustments R1 through R8 have no effect.	1. R44. 2. Tape too transparent.
Makes reading errors.	1. Marginal adjustment of R1 through R8. 2. Marginal adjustment of tape to photocell housing. 3. Tape hole spacing incorrect. 4. Tape holddown spring too high. 5. IC14. 6. Excessive drag on unread tape supply. 7. Damaged tape. 8. Dirt in photocell housing. 9. Tape too transparent.

SEMICONDUCTOR IDENTIFICATION CHARTS

DIODES

COMPONENT	HEATH PART NUMBER	MAY BE REPLACED BY	IDENTIFICATION
D1	56-6	1N710	IMPORTANT: THE BANDED END OF DIODES CAN BE MARKED IN A NUMBER OF WAYS. 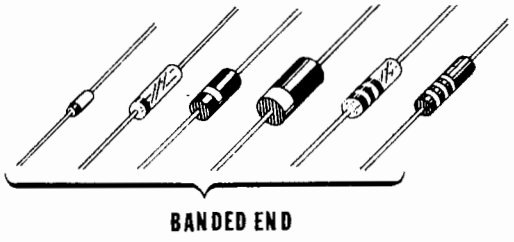
D101, D21, D22, D23, D24	56-56	1N4149	
D9, D10, D11, D27	56-605	1N4746A	
D2, D7	57-42	3A1	
D3, D4, D5, D6, D12-D20, D25, D26	57-65	1N4002	

TRANSISTORS

COMPONENT	HEATH PART NUMBER	MAY BE REPLACED BY	IDENTIFICATION
Q3, Q5, Q7, Q9, Q11, Q13, Q15, Q17, Q19, Q21	417-94	2N3416	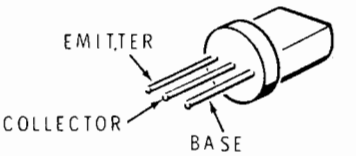
Q23, Q24, Q25, Q26	417-864	MPSA05	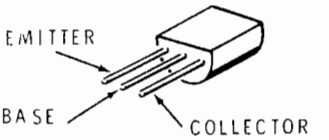
Q1,	417-801	MPSA20	
Q101-Q108	417-859	MRD14B	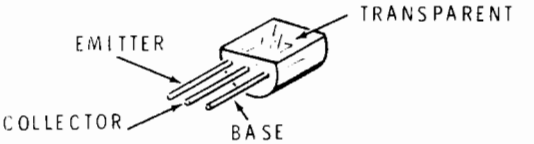
Q2, Q4, Q6, Q8, Q10, Q12, Q14, Q16, Q18, Q20, Q22	417-818	MJE181	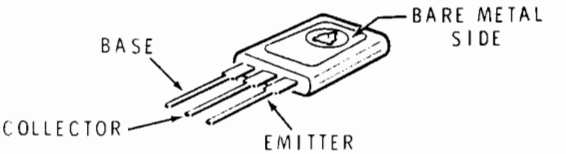

INTEGRATED CIRCUITS

COMPONENT	HEATH PART NUMBER	MAY BE REPLACED BY	IDENTIFICATION
IC17	442-54	UA7805	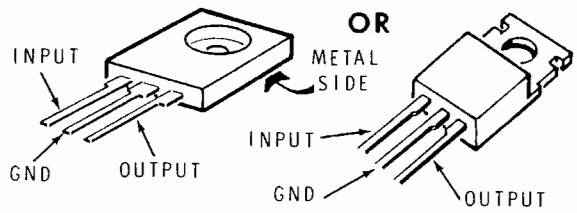
IC1, IC2	442-616	LM3302N, LM2901, OR µA775 (SELECTED)	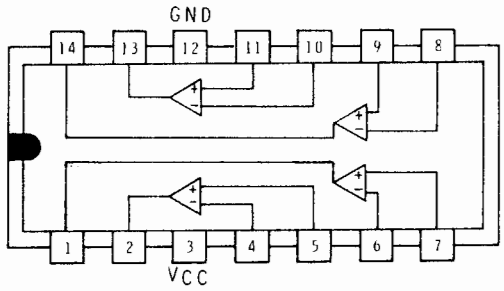
IC13	443-1	SN7400N	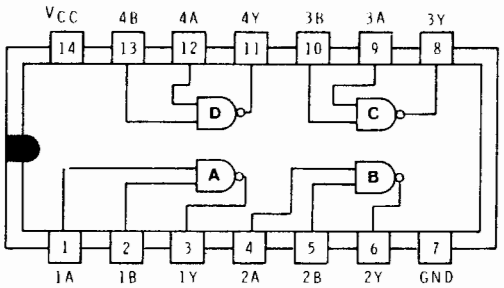
IC15	443-4	SN7472N	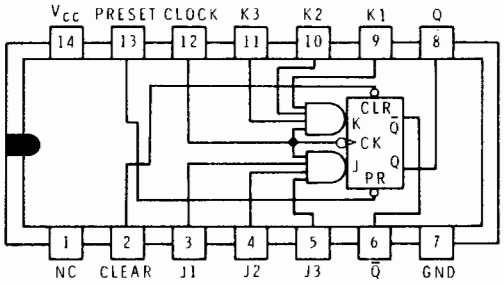
IC8, IC16	443-6	SN7474N	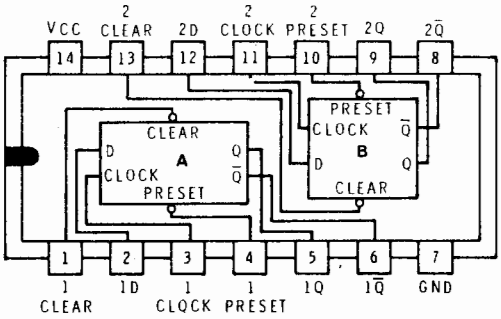

Integrated Circuits (Continued)

COMPONENT	HEATH PART NUMBER	MAY BE REPLACED BY	IDENTIFICATION
IC9, IC11, IC12	443-22	SN74121N	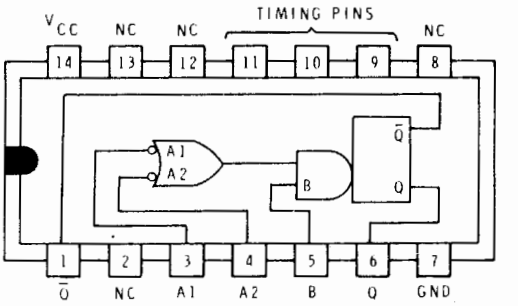
IC10	443-45	SN7408N	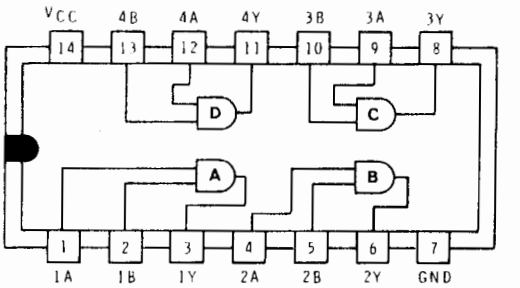
IC5, IC6	443-89	SN7409N	
IC19	443 46	SN7402N	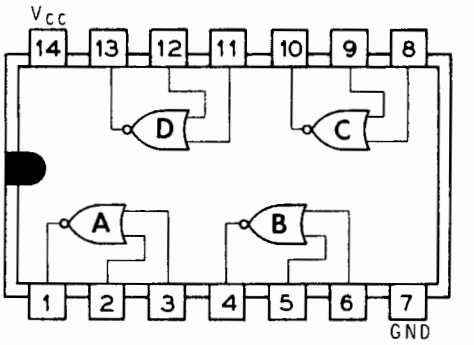
IC18	443-54	SN7403N	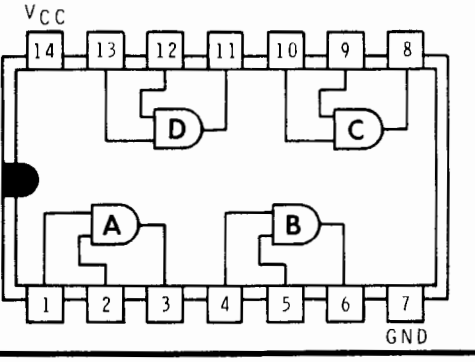

Integrated Circuits (Continued)

COMPONENT	HEATH PART NUMBER	MAY BE REPLACED BY	IDENTIFICATION
IC3, IC4, IC7	443-72	SN7417N	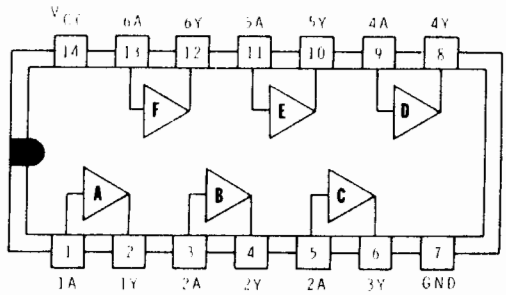
IC17	443-90	SN74123N	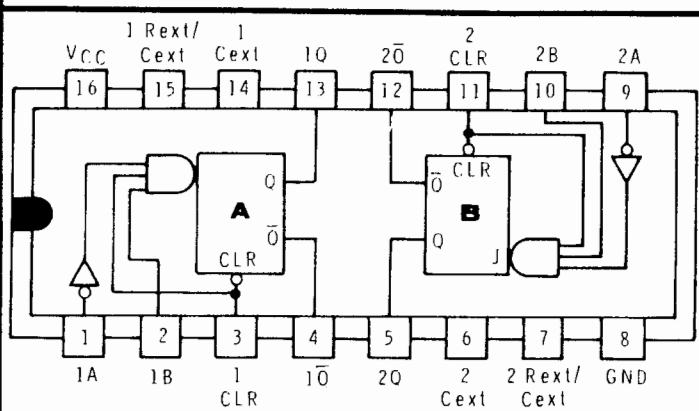
IC14	443-806	9600	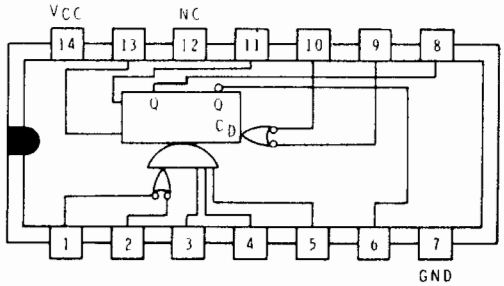

PARTS LIST

RESISTORS

(All resistors are 1/-watt, 10% unless marked otherwise.)

CIRCUIT Comp. No.	HEATH Part No.	DESCRIPTION
R1	10-390	20 kΩ control
R2	10-390	20 kΩ control
R3	10-290	20 kΩ control
R4	10-390	20 kΩ control
R5	10-390	20 kΩ control
R6	10-390	20 kΩ control
R7	10-390	20 kΩ control
R8	10-390	20 kΩ control
R10	Not used	
R11	1-6	470 Ω
R12	1-19	6800 Ω
R13	1-34	680 kΩ
R14	1-46	3900 Ω
R15	1-6	470 Ω
R16	1-19	6800 Ω
R17	1-34	680 kΩ
R18	1-46	3900 Ω
R19	1-6	470 Ω
R20	Not used	
R21	1-19	6800 Ω
R22	1-34	680 kΩ
R23	1-46	3900 Ω
R24	1-6	470 Ω
R25	1-19	6800 Ω
R26	1-34	680 kΩ
R27	1-46	3900 Ω
R28	1-6	470 Ω
R29	1-19	6800 Ω
R30	Not used	
R31	1-34	680 kΩ
R32	1-46	3900 Ω
R33	1-6	470 Ω
R34	1-19	6800 Ω
R35	1-34	680 kΩ

Resistors (cont'd.)

CIRCUIT Comp. No.	HEATH Part No.	DESCRIPTION
R36	1-46	3900 Ω
R37	1-6	470 Ω
R38	1-19	6800 Ω
R39	1-34	680 kΩ
R40	Not used	
R41	1-46	3900 Ω
R42	1-6	470 Ω
R43	1-66	150 Ω
R44	1-66	150 Ω
R45	1-19	6800 Ω
R46	1-34	680 kΩ
R47	1-46	3900 Ω
R48	1-9	1000 Ω
R49	1-9	1000 Ω
R50	Not used	
R51	1-9	1000 Ω
R52	1-9	1000 Ω
R53	1-9	1000 Ω
R54	1-9	1000 Ω
R55	1-9	1000 Ω
R56	1-9	1000 Ω
R57	1-10	1200 Ω
R58	1-10	1200 Ω
R59	1-10	1200 Ω
R60	Not used	
R61	1-10	1200 Ω
R62	1-10	1200 Ω
R63	1-10	1200 Ω
R64	1-10	1200 Ω
R65	1-10	1200 Ω
R66	1-9	1000 Ω
R67	1-9	1000 Ω
R68	1-9	1000 Ω
R69	1-9	1000 Ω
R70	Not used	
R71	1-9	1000 Ω
R72	1-9	1000 Ω
R73	1-9	1000 Ω
R74	1-9	1000 Ω

Resistors (cont'd.)

CIRCUIT Comp. No.	HEATH Part No.	DESCRIPTION
R75	2-723-12	12.4 kΩ, 1/4-watt, 1%
R76	2-662-12	7500 Ω, 1/4-watt, 1%
R77	2-662-12	7500 Ω, 1/4-watt, 1%
R78	NOT USED	
R79	1-10	1200 Ω
R80	1-22	22 kΩ
R81	1-9	1000 Ω
R82	1-10	1200 Ω
R83	1-9	1000 Ω
R84	1-9	1000 Ω
R85	1-6	470 Ω
R86	1-6	470 Ω
R87	Not used	
R88	2-43-12	50 kΩ, 1/4-watt, 1%
R89	1-10	1200 Ω
R90	1-9	1000 Ω
R91	1-10	1200 Ω
R92	1-10	1200 Ω
R93	1-10	1200 Ω
R94	1-9	1000 Ω
R101	6-102	1000 Ω
R102	6-473	47 kΩ
R103	6-103	10 kΩ
R104	6-102	1000 Ω
R105	6-102	1000 Ω
R106	6-102	1000 Ω
R107	6-102	1000 Ω

CAPACITORS

CIRCUIT Comp. No.	HEATH Part No.	DESCRIPTION
C1	21-95	.1 μF ceramic
C2	21-70	.01 μF ceramic
C3	25-217	6000 μF, 40V electrolytic
C4	25-272	6000 μF, 15V electrolytic
C5	25-272	6000 μF, 15V electrolytic
C6	Not Used	
C7	21-95	.1 μF ceramic
C8	21-95	.1 μF ceramic
C9	25-841	4.7 μF tantalum
C10	Not used	
C11	25-841	4.7 μF tantalum
C12	21-95	.1 μF ceramic
C13	25-841	4.7 μF tantalum
C14	21-95	.1 μF ceramic
C15	21-95	.1 μF ceramic
C16	27-2	1 μF Mylar
C17	25-804	100 μF electrolytic
C101	27-62	.68 μF Mylar
C102	21-172	100 pF ceramic
C103	21-95	.1 μF ceramic

DIODES

CIRCUIT Comp. No.	HEATH Part No.	DESCRIPTION
D1	56-6	1N710 zener
D2	57-42	3A1
D3	57-65	1N4002
D4	57-65	1N4002
D5	57-65	1N4002
D6	57-65	1N4002

Diodes (cont'd.)

CIRCUIT Comp. No.	HEATH Part No.	DESCRIPTION
D7	57-42	3A1
D8	Not used	
D9	56-605	1N4746A
D10	56-605	1N4746A
D11	56-605	1N4746A
D12	57-65	1N4002
D13	57-65	1N4002
D14	57-65	1N4002
D15	57-65	1N4002
D16	57-65	1N4002
D17	57-65	1N4002
D18	57-65	1N4002
D19	57-65	1N4002
D20	57-65	1N4002
D21	56-56	1N4149
D22	56-56	1N4149
D23	56-56	1N4149
D24	56-56	1N4149
D25	57-65	1N4002
D26	57-65	1N4002
D27	56-605	1N4746A
D101	56-56	1N4149

TRANSISTORS

CIRCUIT Comp. No.	HEATH Part No.	DESCRIPTION
Q1	417-801	MPSA20
Q2	417-818	MJE181
Q3	417-94	2N3416
Q4	417-818	MJE181
Q5	417-94	2N3416
Q6	417-818	MJE181
Q7	417-94	2N3416
Q8	417-818	MJE181
Q9	417-94	2N3416
Q10	417-818	MJE181
Q11	417-94	2N3416
Q12	417-818	MJE181
Q13	417-94	2N3416
Q14	417-818	MJE181
Q15	417-94	2N3416
Q16	417-818	MJE181
Q17	417-94	2N3416
Q18	417-818	MJE181
Q19	417-94	2N3416
Q20	417-818	MJE181
Q21	417-94	2N3416
Q22	417-818	MJE181
Q23	417-864	MPSA05
Q24	417-864	MPSA05
Q25	417-864	MPSA05
Q26	417-864	MPSA05
Q101	417-859	MRD14B
Q102	417-859	MRD14B
Q103	417-859	MRD14B
Q104	417-859	MRD14B
Q105	417-859	MRD14B
Q106	417-859	MRD14B
Q107	417-859	MRD14B
Q108	417-859	MRD14B

INTEGRATED CIRCUITS

CIRCUIT Comp. No.	HEATH Part No.	DESCRIPTION
IC1	442-616	LM3302N, LM2901, or μA 775 (selected)
IC2	442-616	LM3302N, LM2901, or μA 775 (selected)
IC3	443-72	SN7417N
IC4	443-72	SN7417N
IC5	443-89	SN7409N
IC6	443-89	SN7409N
IC7	443-72	SN7417N
IC8	443-6	SN7474N
IC9	443-22	SN74121N
IC10	443-45	SN7408N
IC11	443-22	SN74121N
IC12	443-22	SN74121N
IC13	443-1	SN7400N
IC14	443-806	9600
IC15	443-4	SN7472N
IC16	443-6	SN7474N
IC17	442-54	UA7805
IC17	443-90	SN74123N
IC18	443-54	SN7403N
IC19	443-46	SN7402N

SOLENOIDS

L1	69-83
L2	69-83
L3	69-83
L4	69-83
L5	69-83
L6	69-83
L7	69-83
L8	69-83
L9	69-83
L10	69-83

GENERAL

CIRCUIT Comp. No.	HEATH Part No.	DESCRIPTION
T1	54-939	Transformer
LP1	412-81	Lamp #1141
M1	420-97	Stepper motor
SW1	60-619	Power switch
SW2	60-608	NOR/LOW switch
SW3	60-54	120/240 switch
SW4	64-841	Copy switch
SW5	64-840	Punch switch
SW6	64-839	Feed switch
SW7	64-840	Read switch
F1	421-20	1/2-ampere, slow-blow fuse
F1	421-23	1-ampere, slow-blow fuse

MECHANICAL PARTS

266-987	Punch assembly
205-1715	Actuator
205-1725	Dog plate
204-2278	Roller bracket
251-11	Small hole spade bolt
253-36	Large spring washer
451-603	Ratchet gear
266-920	Long linkage
266-921	Short linkage
266-936	Roller
258-710	Dog spring
262-44	1-1/2" black shaft
455-44	Nylon bearing
352-13	Silicone grease
352-28	Thread-locking sealant
204-2272	Stop bracket
73-59	Small bracket
346-66	Small sleeving
H-10-2	3 rolls paper tape
H-10-3	3 packages fanfold paper tape

ILLUSTRATION BOOKLET

Part of 595-2020-02

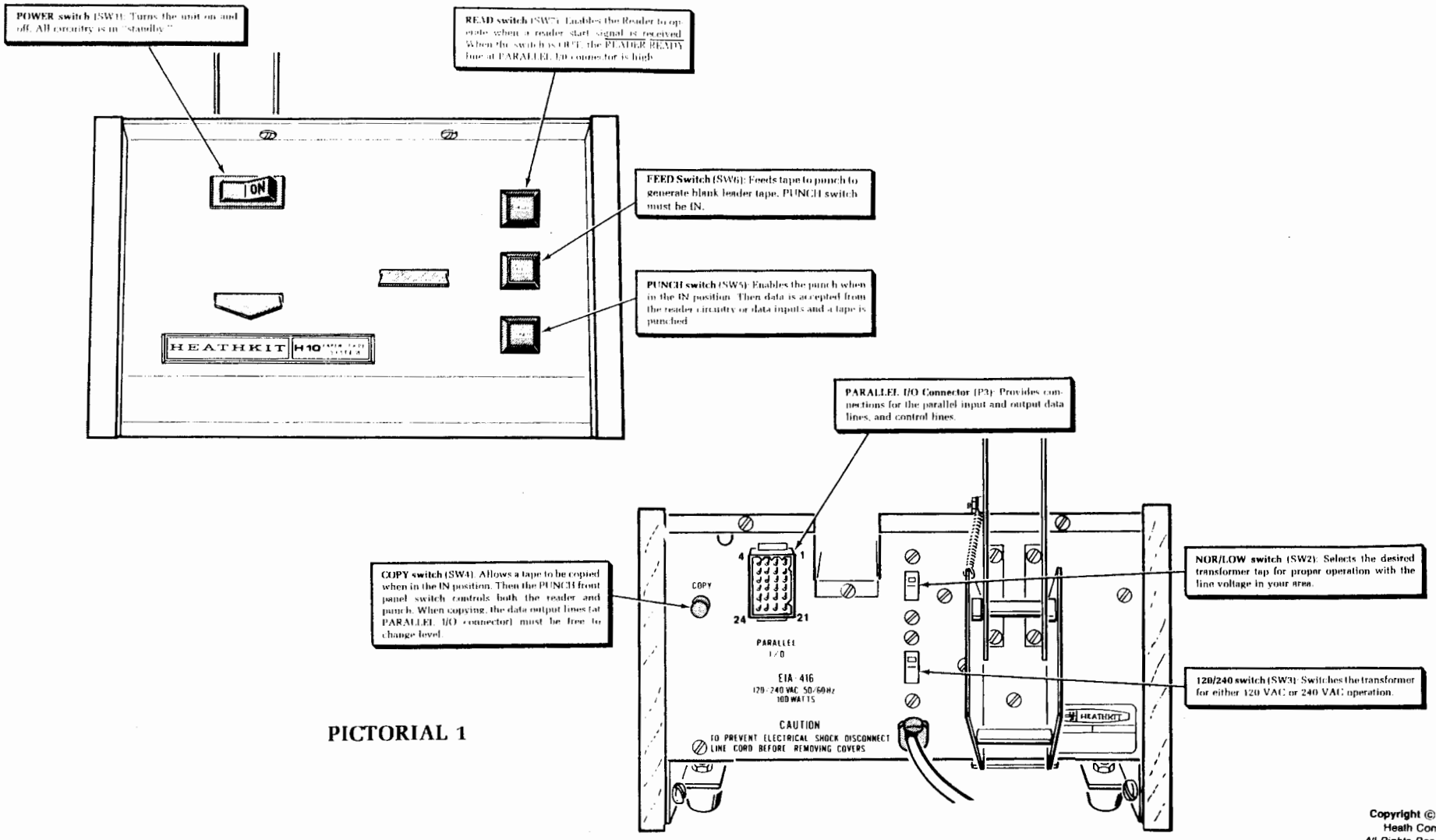

PICTORIAL 1

Copyright © 1977
Heath Company
All Rights Reserved
Printed in the United States of America

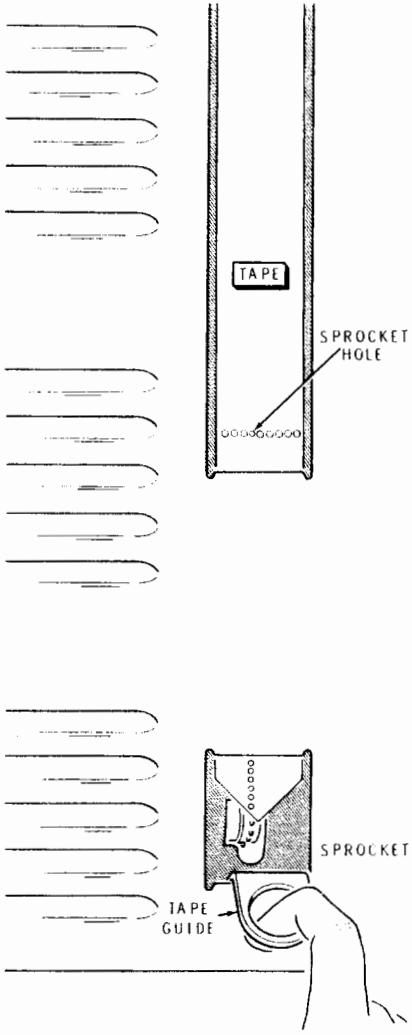

PICTORIAL 2

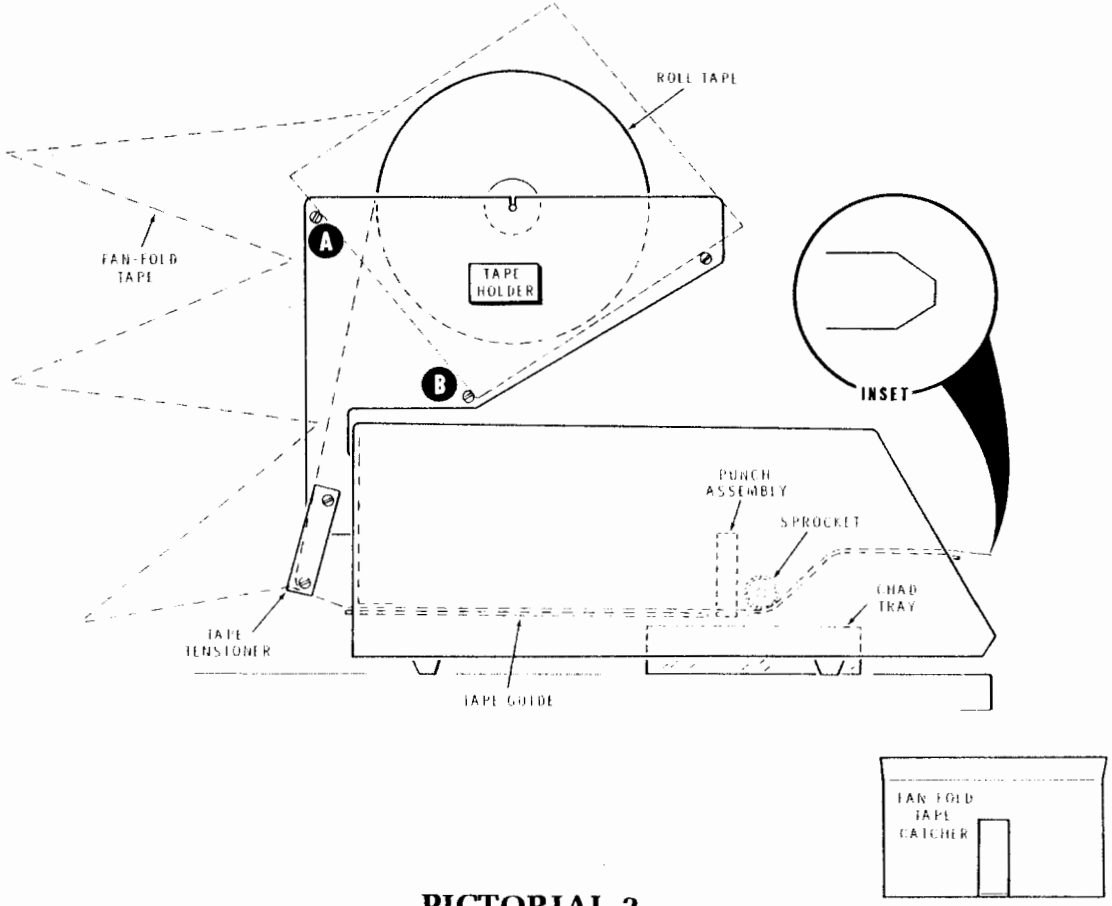

PICTORIAL 3

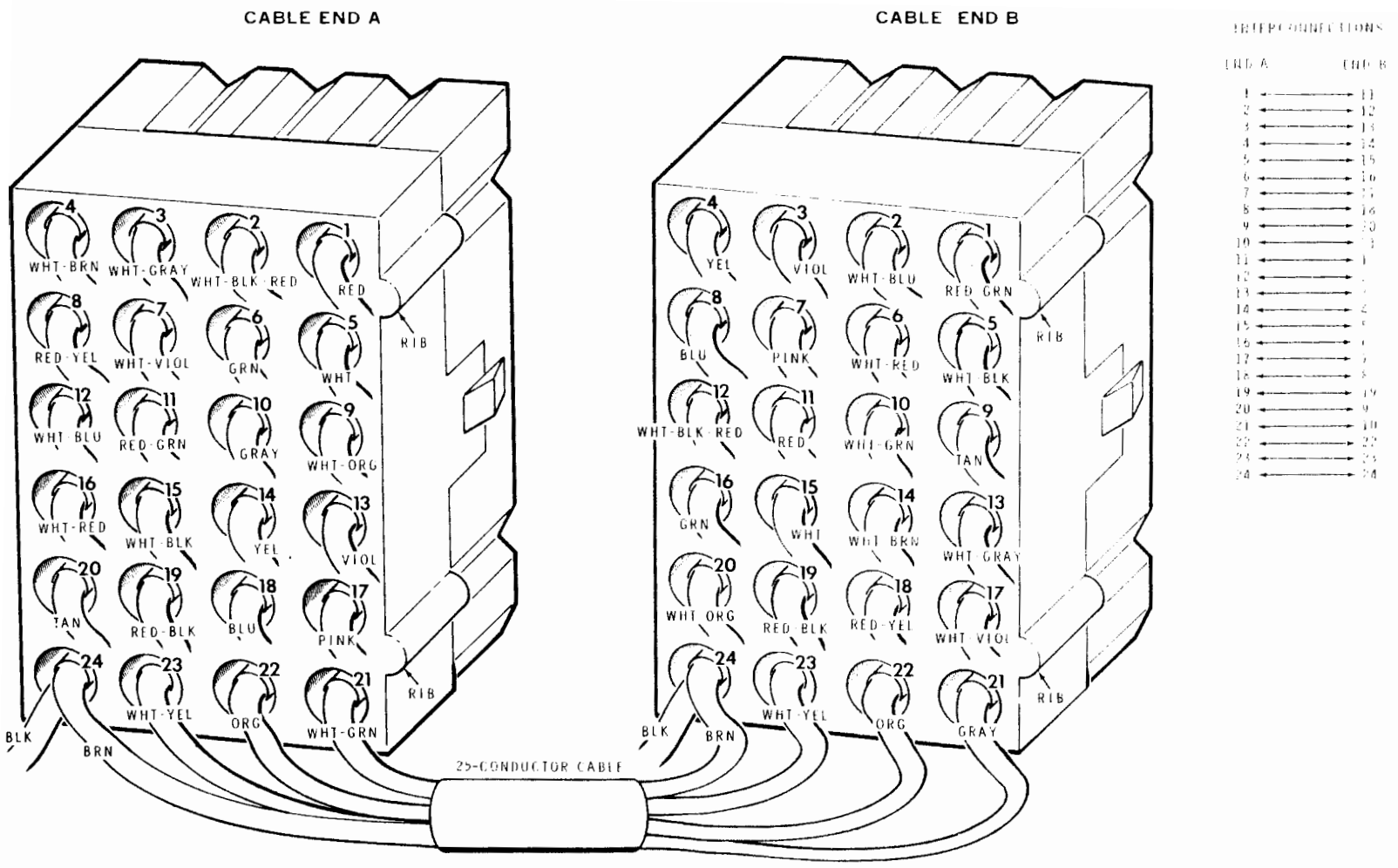
CABLE END A
CABLE END B
INTERCONNECTIONS
END A
END B
4 WHT-BRN
3 WHT-GRAY
2 WHT-BLK-RED
1 RED
8 RED-YEL
7 WHT-VIOL
6 GRN
5 WHT
12 WHT-BLU
11 RED-GRN
10 GRAY
9 WHT-ORG
16 WHT-RED
15 WHT-BLK
14 YEL
13 VIOL
20 TAN
19 RED-BLK
18 BLU
17 PINK
24 BLK
23 WHT-YEL
22 ORG
21 WHT-GRN
BRN
RIB
RIB
RIB
4 YEL
3 VIOL
2 WHT-BLU
1 RED-GRN
8 BLU
7 PINK
6 WHT-RED
5 WHT-BLK
12 WHT-BLK-RED
11 RED
10 WHT-GRN
9 TAN
16 GRN
15 WHT
14 WHT-BRN
13 WHT-GRAY
20 WHT-ORG
19 RED-BLK
18 RED-YEL
17 WHT-VIOL
24 BLK
23 WHT-YEL
22 ORG
21 GRAY
BRN
RIB
RIB
RIB
25-CONDUCTOR CABLE

PICTORIAL 7

CABLE END B

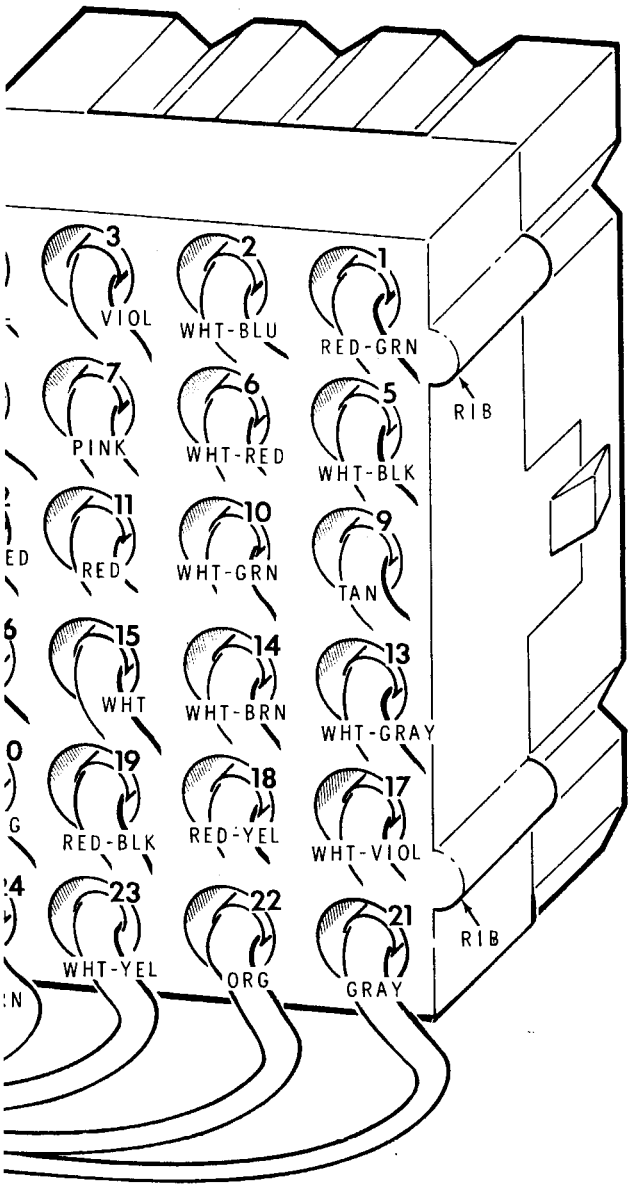

INTERCONNECTIONS

END A		END B
1	↔	11
2	↔	12
3	↔	13
4	↔	14
5	↔	15
6	↔	16
7	↔	17
8	↔	18
9	↔	20
10	↔	21
11	↔	1
12	↔	2
13	↔	3
14	↔	4
15	↔	5
16	↔	6
17	↔	7
18	↔	8
19	↔	19
20	↔	9
21	↔	10
22	↔	22
23	↔	23
24	↔	24

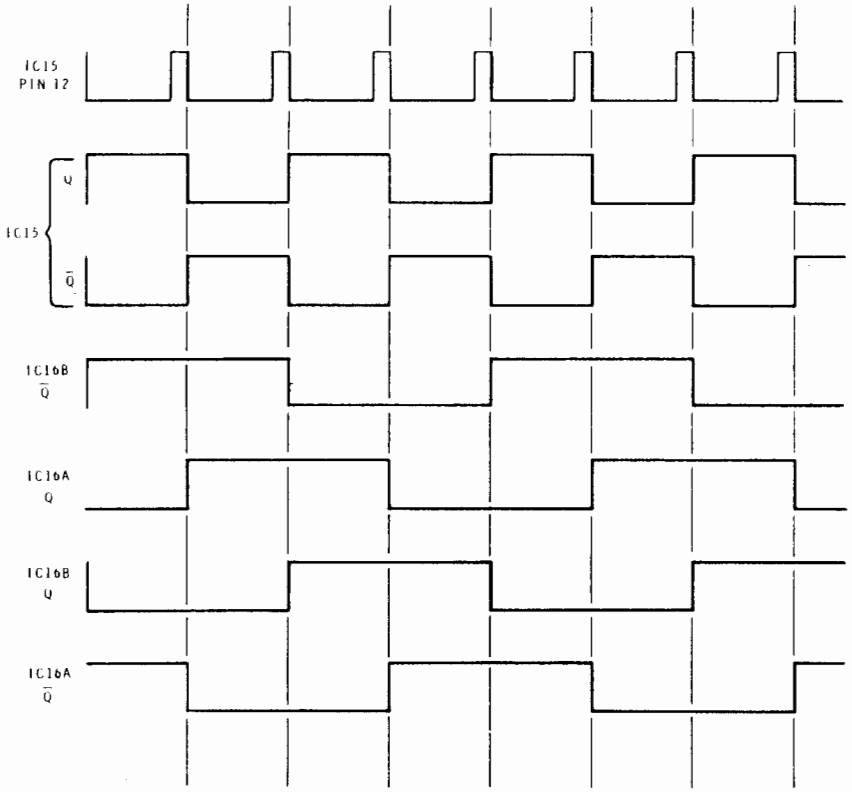

PICTORIAL 8

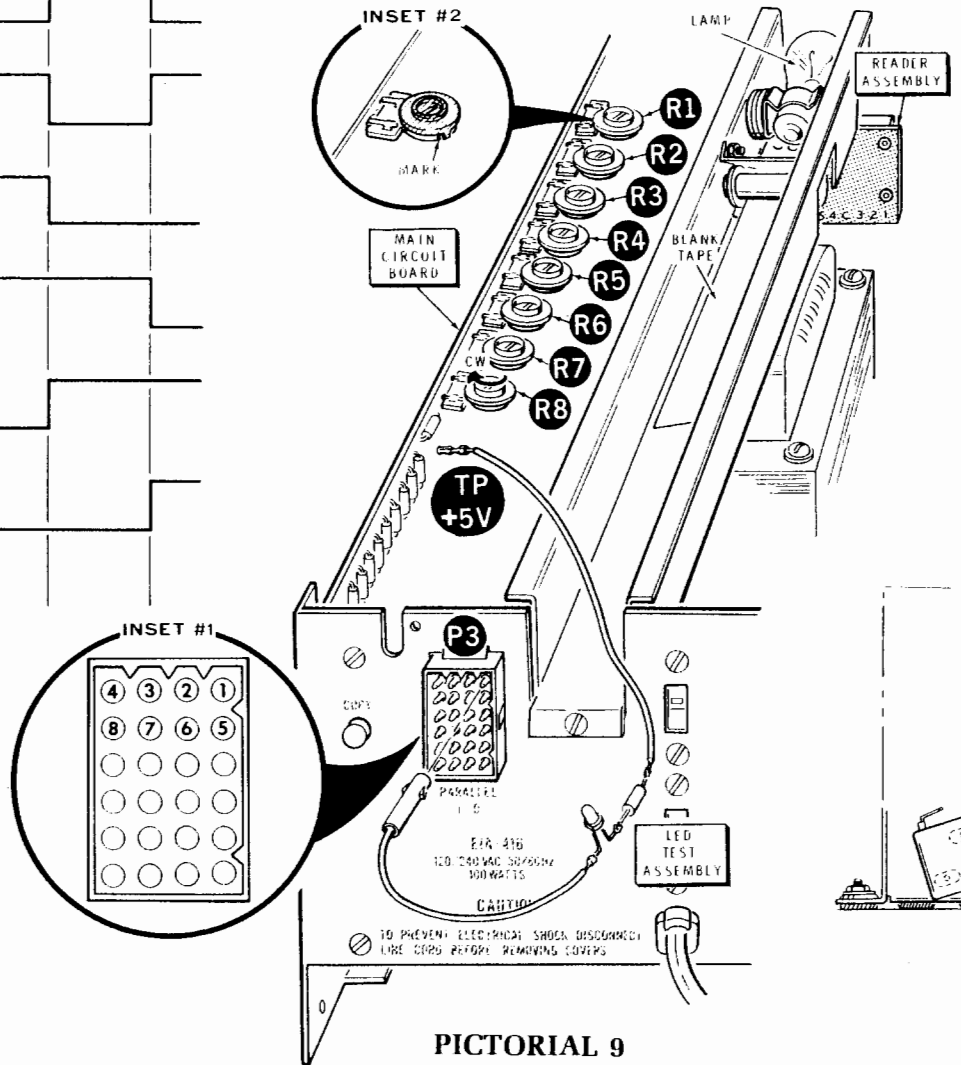

PICTORIAL 9

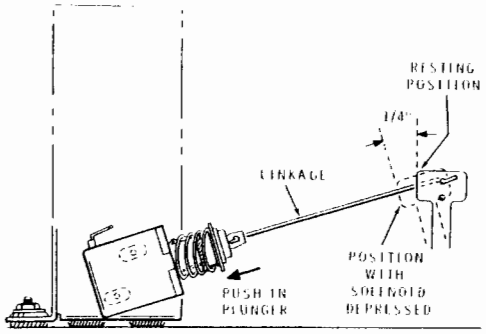

PICTORIAL 10

CIRCUIT BOARD X-RAY VIEWS

NOTE: To find the PART NUMBER of a component for the purpose of ordering a replacement part:

A. Find the circuit component number (R5, C3, etc.) on the X-Ray View.

B. Locate this same number in the "Circuit Component Number" column of the "Parts List" in the back of this Manual.

C. Adjacent to the circuit component number, you will find the PART NUMBER and DESCRIPTION which must be supplied when you order a replacement part.

READER CIRCUIT BOARD

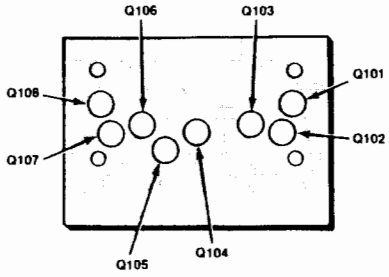

(Viewed from foil side)

SWITCH CIRCUIT BOARD

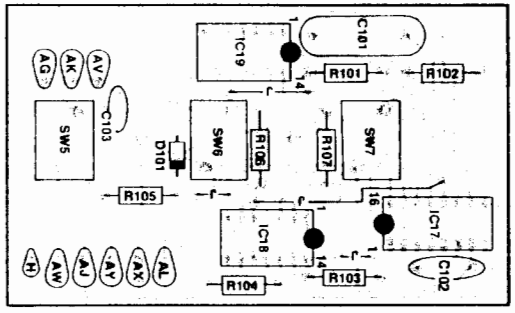

(Viewed from component side)

MAIN CIRCUIT BOARD

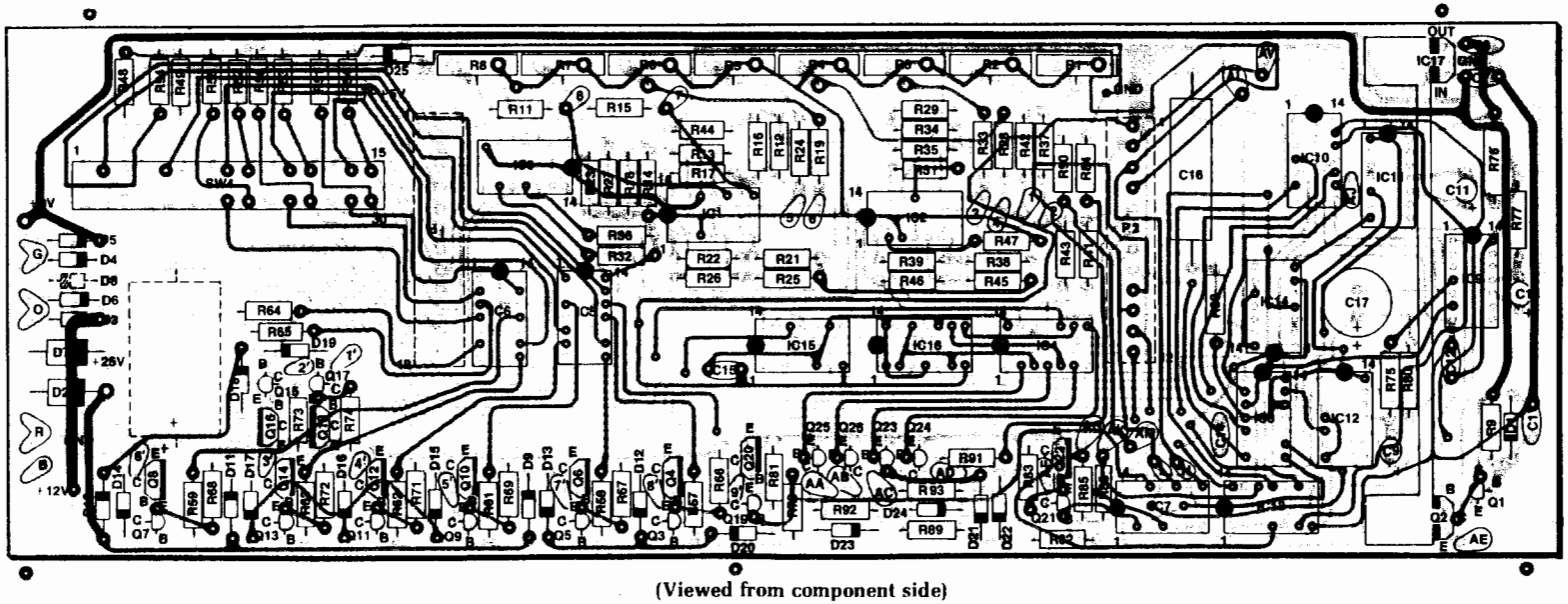

(Viewed from component side)